Actuated Valves

Product Information

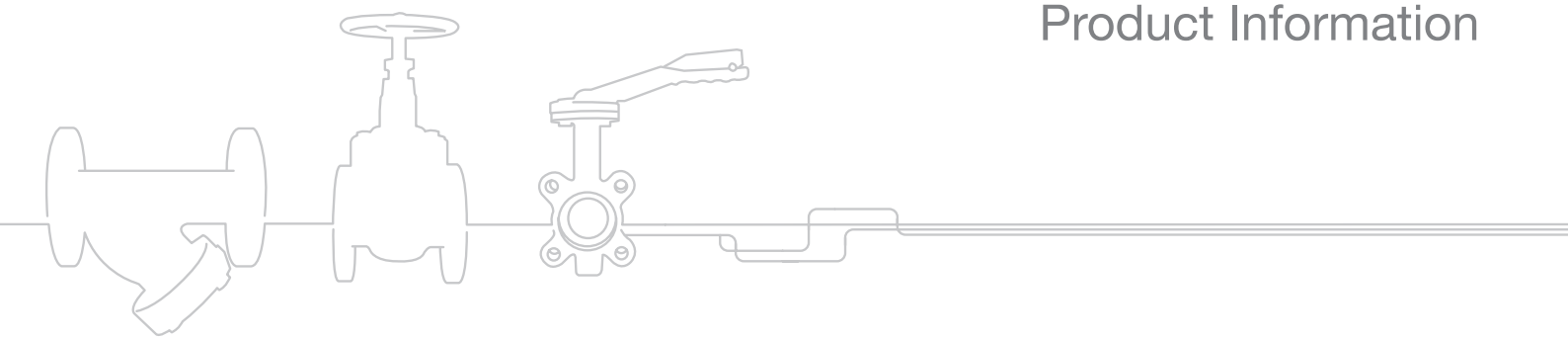

MEMBER OF BVAA 2017/18

It's **all** at Albion

HQ3

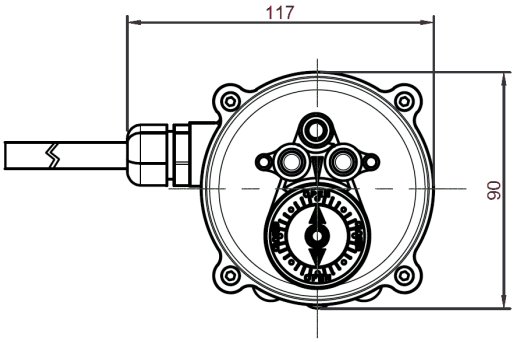

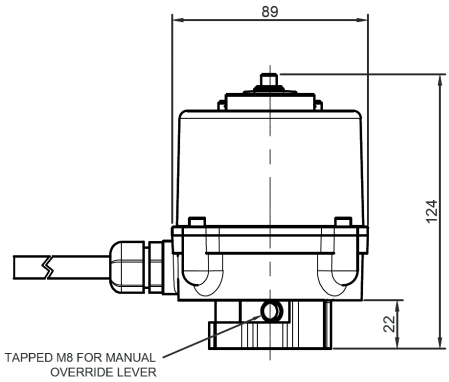

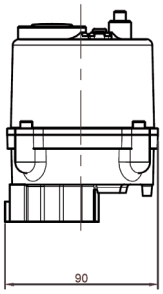

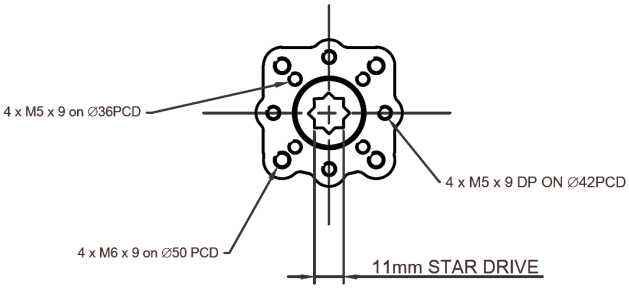

HQ Electric Actuator for Albion Ball & Butterfly Valves

Features

- Small, light and compact design
- Manual override lever
- 4 off limit switches
- Anti condensation heater
- Visual indication including LED lamps to show either open or closed
- 3m Flying lead - no need for the cover to be removed during installation
- One unit covers 24VDC, 110VAC & 230VAC

Standard Specification

Enclosure	:	Aluminium Weatherproof IP67
Power Supply	:	85-265v 50/60Hz. 24v DC
Duty Cycle (On/Off Duty)	:	S4, 50%
Motor	:	Reversible Motor
Limit Switches	:	2 x SPDT, 250V AC 3A
Additional Limit Switches	:	2 x SPDT, 250V AC 3A
Space Heater	:	0.5W
Manual Override	:	Push button/Lever operated
Movement Angle	:	90° ± 5° (0° to 90°)
Ambient Temperature	:	-20°C to 70°C
External Coating	:	Dry Powder, Polyester

Performance

MODEL	MAXIMUM OUTPUT TORQUE	OPERATING TIME 50/60Hz - 90°	MOUNTING BASE ISO 5211
HQ3	30NM	12 SECS	F03/F04/F05 11mm STAR

MODEL	RATED CURRENT (A)			WEIGHT
	AC 1PH. 50/60Hz		DC	
	110V	220V	24V	
HQ3	0.1/0.1	0.1/0.1	0.5	1.2kg

Dimensions in mm

This data sheet is designed as a guide and should not be regarded as wholly accurate in every detail. We reserve the right to amend the specification of any product without notice.

HQ4 & HQ6

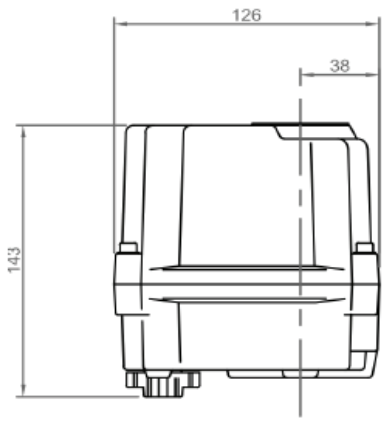

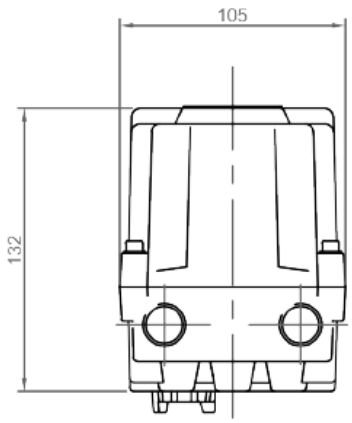

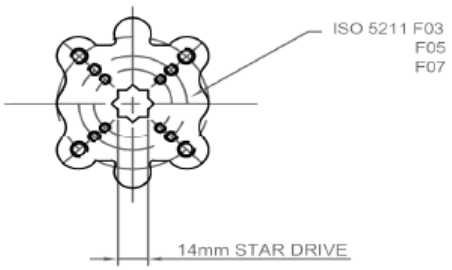

HQ Electric Actuator for Albion Ball & Butterfly Valves

Features

- Small, light and compact design
- High Output torque
- Alloy Gearing
- Multi Voltage Options

Standard Specification

Enclosure	:	Weatherproof IP67
Power Supply	:	110/230v 50/60Hz, 24vAC/DC
Duty Cycle (On/Off Duty)	:	S2 35%
Motor	:	Reversible Motor
Limit Switches	:	2 x SPDT, 250V AC 3A
Additional Limit Switches	:	2 x SPDT, 250V AC 3A
Anti-condensation Heater	:	2W (110/220V AC)
Manual Override	:	Hexagon
Conduit Entries	:	2 x M20
Movement Angle	:	320° ± 10° (0° to 320°)
Ambient Temperature	:	-20°C to 70°C
External Coating	:	Dry Powder, Polyester

Optional Specification

Enclosure	:	Waterproof IP68
Conduit Entries	:	2 x PG 13.5, 1/2” NPT
PIU	:	Potentiometer Unit (1K - 10K)
PCU	:	Proportional Control Unit (In/Out:0-10V, 4-20mA)
CPT	:	Current Position Transmitter (Output 4-20mA DC)
LCU	:	Local Control Unit (Remote/Open/Stop/Close s/w)

Performance

MODEL	MAXIMUM OUTPUT TORQUE	OPERATING TIME 50/60Hz - 90°	MOUNTING BASE ISO 5211
HQ4	40NM	14/12 SEC	F03/F05/F07 - 14mm STAR
HQ6	60NM	14/12 SEC	F03/F05/F07 - 14mm STAR

MODEL	RATED CURRENT (A)				WEIGHT
	110VAC	220VAC	24VAC	24VDC	
HQ4	0.4	0.2	1.7	1.7	3kg
HQ6	0.4	0.2	1.7	1.7	3kg

Dimensions in mm

This data sheet is designed as a guide and should not be regarded as wholly accurate in every detail. We reserve the right to amend the specification of any product without notice.

HQ5

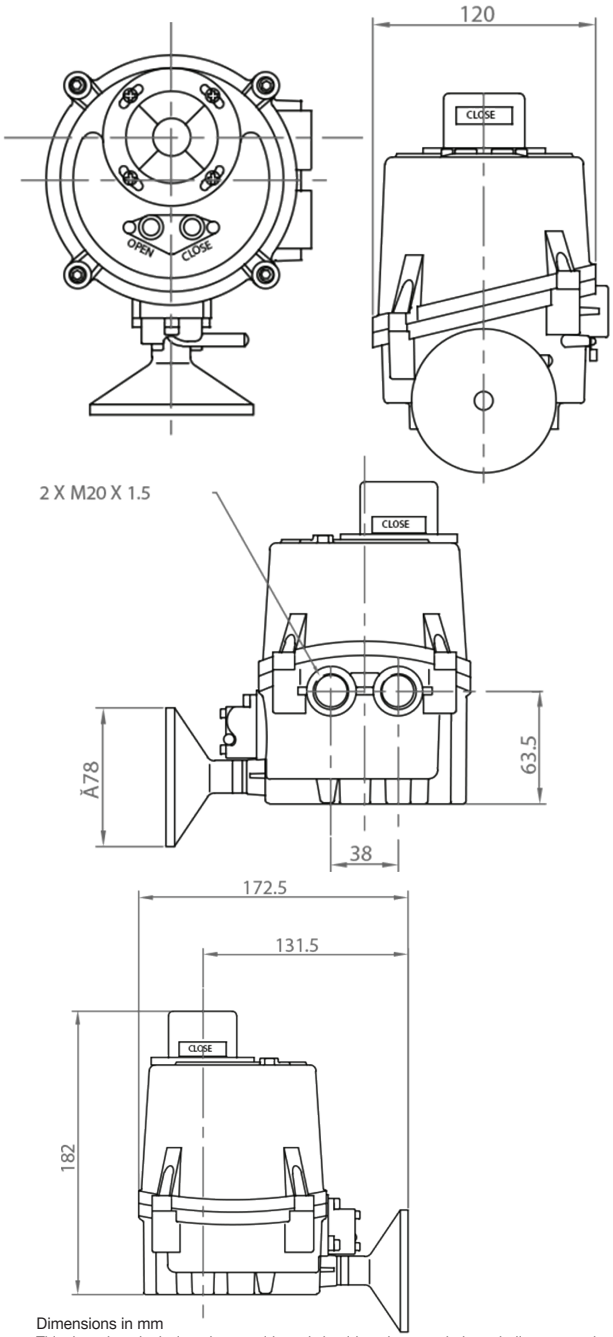

Dimensions in mm

HQ Electric Actuator for Albion Ball & Butterfly Valves

Features

- Multi Voltage Options
- High corrosion resistance, anodized & painted housing
- Low current, long-life actuator due to unique brushless DC motor
- Visual beacon indicator & LED lamps
- 70% Duty Rating (on/off only)
- Declutchable manual override handwheel
- Electronic torque limiter

Standard Specification

Enclosure	:	Weatherproof enclosure IP67
Power supply	:	85 - 265 VAC 1ph, 50/60 Hz I 24 VAC/DC
Duty cycle	:	S4: 70% (average load of 80% Max. torque) S2: 50% (average load of 80% Max. torque)
Motor	:	BLDC motor
Limit switches	:	2 x open/close, SPDT, 250 V ac 10 A rating
Additional limit switches	:	2 x open/close, SPDT, 250 V ac 10 A rating
Anti-condensation board	:	2 W
Manual override	:	Manual Handwheel
Cable entries	:	2 x M20
Movement angle	:	320 ± 10° (0 - 330°)
Ambient temperature	:	-20°C to +80°C

Optional Specification

PIU	:	Potentiometer unit (1-10 kΩ)
PCU	:	Proportional control unit (in/out: 0-10V or 4-20 mA)
*CPT	:	Current position transmitter (output: 4-20mA dc)
WTA	:	Watertight enclosure actuator (IP68 10 m 72 hr)
TS	:	Torque overload indicator via flashing LED module

*NOTE: These options are currently under development

Performance

MODEL	MAXIMUM OUTPUT TORQUE	OPERATING TIME 50/60Hz - 90°	MOUNTING BASE ISO 5211
HQ5	50NM	13 SEC	F03/F04/F05/F07 - 14mm STAR

MODEL	RATED CURRENT (A)				WEIGHT
	110VAC	220VAC	24VAC	24VDC	
HQ5	0.1	0.05	0.8	0.8	2.6kg

This data sheet is designed as a guide and should not be regarded as wholly accurate in every detail. We reserve the right to amend the specification of any product without notice.

HQ8 - HQ120

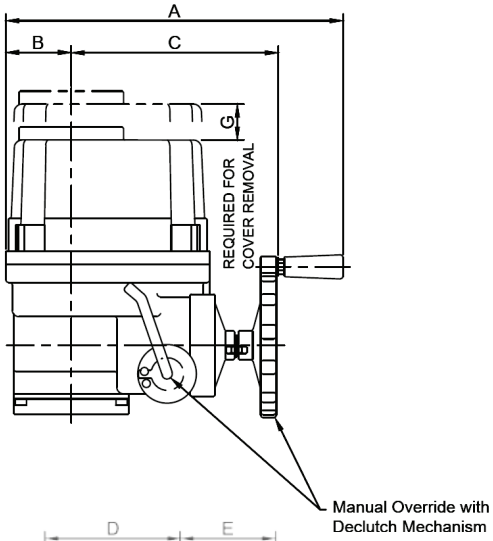

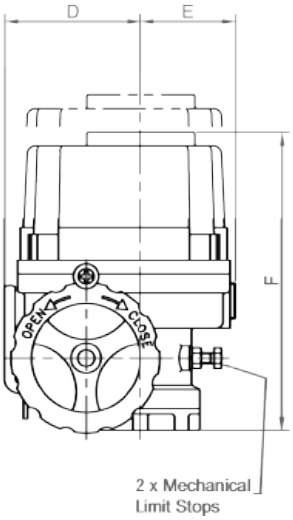

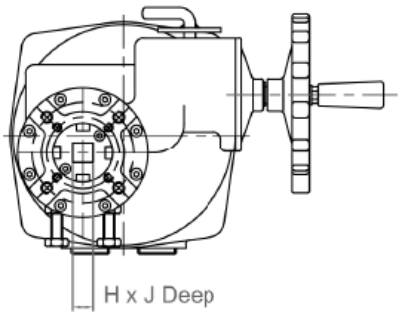

HQ Electric Actuator for Albion Ball & Butterfly Valves

Features

- Wide range of output torques
- Alloy Gearing
- Control Options include 4-20ma positioner and failsafe
- Die cast aluminium housing
- Multi Voltage Options

Standard Specification

Enclosure	: Weatherproof IP67 (IP68 Option)
Power Supply	: 110/230v 50/60Hz, 24vAC/DC,380/440V 3Phase
Duty Cycle (On/Off Duty)	: S4, 70% Standard, 100% for max 30 mins
Motor	: Squirrel Caged Induction Motor
Limit Switches	: 4 x SPDT, 250V AC 10A
Torque Switches	: 2 x SPDT, 250vAC 10A (HQ015-HQ120)
Space Heater	: 10W(110/220VAC) Anti Condensation
Conduit Entries	: 2 x M25 (PG 13.5 OR 1/2”NPT Option)
Travel Angle	: 90° ± 5°
Ambient Temperature	: -20°C to +70°C On/Off, -20° to +55° Modulating
External Coating	: Anodised before Dry Powder Polyester Coating

Performance

MODEL	HQ8	HQ15	HQ20	HQ30	HQ50	HQ60	HQ80	HQ120
TORQUE (Nm)	80	150	200	300	500	600	800	1200
SPEED 90 50/60hZ	16/13	25/21	25/21	31/26	31/26	31/26	34/28	34/28
CURRENT110/1/50	1.1	1.65	1.67	1.86	3.62	3.62	4.1	4.2
(A) 220/1/50	0.55	0.88	0.89	0.92	1.58	1.62	2.2	2.35
24VAC/DC	3.7	5.3	6.5	8.6				
WEIGHT (Kg)	7.4	16.6	16.6	22	23	23	29	29
STANDARD SQ SIZE	14	17	17	22	22	27	27	36

Dimensions

MODEL	BASE	A	B	C	D	E	F	G	H*	J
HQ8	F07	258	50	157	100	70	235	120	14	35
HQ15	F07/F10	338	73	200	142	87	268	160	17	45
HQ20	F07/F10	338	73	200	142	87	268	160	17	45
HQ30	F10/F12	368	82	221	160	99	290	180	22	52
HQ50	F10/F12	368	82	221	160	99	290	180	22	52
HQ60	F10/F12	368	82	221	160	99	290	180	27	52
HQ80	F12/F14	410	103	242	186	111	330	210	27	60
HQ120	F12/F14	410	103	242	186	111	330	210	36	60

* Can be machined to suit most valve stems (on request)

Dimensions in mm

This data sheet is designed as a guide and should not be regarded as wholly accurate in every detail. We reserve the right to amend the specification of any product without notice.

HP Pneumatic Actuator

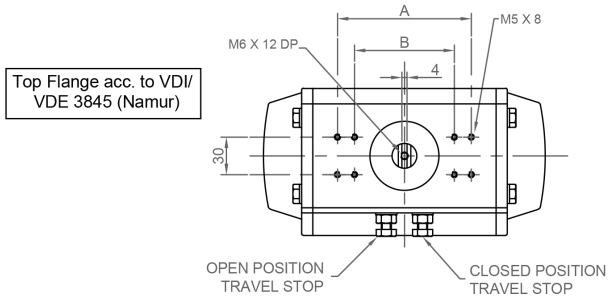

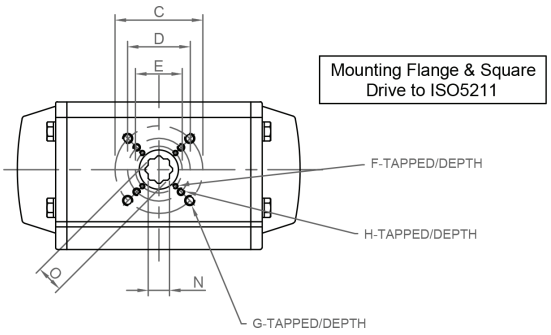

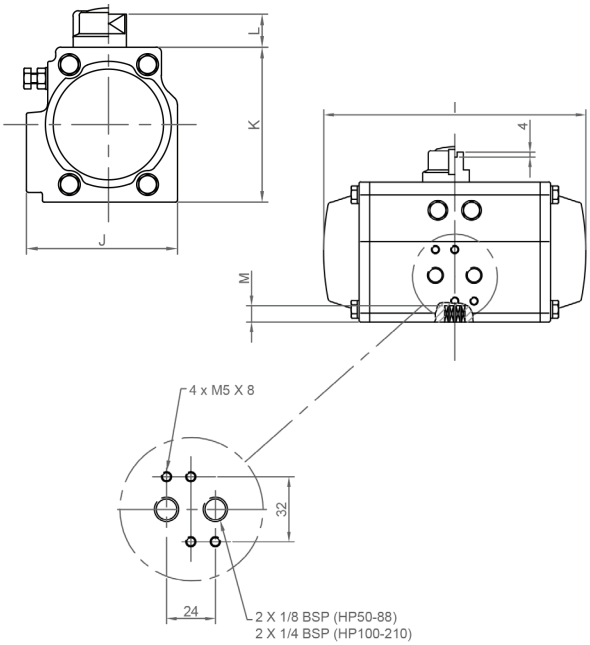

HP Pneumatic Actuator for Albion Ball & Butterfly Valves

Features

- Double acting & Spring return models
- Hard anodised aluminium housing
- Wide range of torque & control options available

HPS / HPD	50	63	66	75	88	100	115
A	-	-	-	-	-	-	-
B	80	80	80	80	80	80	80
C	50	70	70	70	102	102	102
D	36	50	50	50	70	70	70
E	-	-	-	-	50	50	-
F	-	-	-	-	M6/9	M6/9	-
G	M6/9	M8/12	M8/12	M8/12	M10/15	M10/15	M10/15
H	M5/8	M6/9	M6/9	M6/9	M8/12	M8/12	M8/12
I	144	163	202	210	247	268	316
J	72	85	85	96	108	123	141
K	73	87	87	104	116	128	146
L	20	20	20	20	20	20	20
M	14	18	18	22	22	22	32
N	11	14	14	17	17	17	22
O	14.2	18.2	18.2	22.2	22.2	22.2	28.2

HPS / HPD	125	145	160	180	200	210
A	-	130	130	130	130	130
B	80	80	80	80	80	80
C	125	125	125	125	140	140
D	102	102	102	102	-	-
E	70	-	-	-	-	-
F	M8/12	-	-	-	-	-
G	M12/18	M12/18	M12/18	M12/18	M16/24	M16/24
H	M10/15	M10/15	M10/15	M10/15	-	-
I	347	414	467	497	555	628
J	151	172	190	206	227	236
K	159	179	196	221	247	256
L	20	30	30	30	30	30
M	32	36	36	39	39	43
N	22	27	27	36	36	36
O	28.2	36.2	36.2	48.2	48.2	48.2

For Torque information please contact the sales office.

Dimensions in mm

This data sheet is designed as a guide and should not be regarded as wholly accurate in every detail. We reserve the right to amend the specification of any product without notice.

Namur Solenoid

Universal Direct Mount Namur Solenoid

Features

- Life Cycle 12,000,000 operations
  5/2 - 3/2 Interchangeable
- Available in 110VAC, 230VAC, 24VAC, 24VDC
- IP65
- Manual over-ride control

5/2 way (Double Acting Actuators)

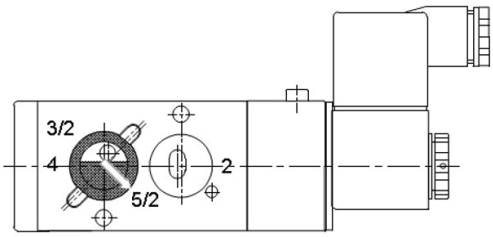

Model: V523231E4-08MG 5/2
5/2 way with silencers function diagram

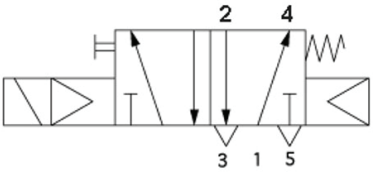

3/2 way (Spring Return Actuators)

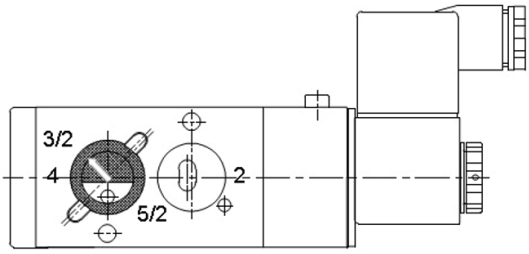

Model: V523231E4-08MG 3/2
3/2 way with silencers function diagram

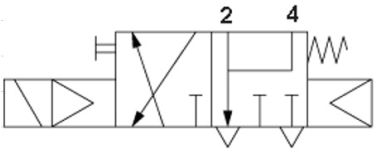

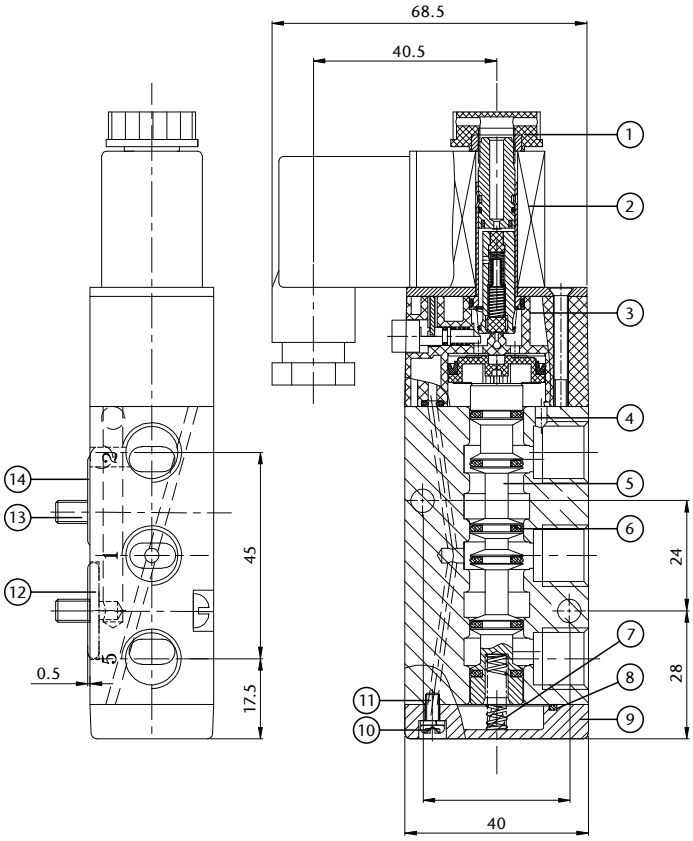

N.	Component	Material
1	Nut	PA66 (Nylon) +30% GF (Plastic)
2	Coil (Din Plug)	Enamelled Wire & Engineering Plastic
3	Pilot Unit	Pure Steel & Cu & Stainless Steel
4	Valve Body	6061-T6 (Aluminium Alloy)
5	Spool	6061-T6 (Aluminium Alloy)
6	Flat Ring	HNBR 80°
7	Spring	SUS304-WPB
8	Diamond Ring	NBR
9	Rear Cover	Zinc Alloy
10	Screw	Q235 (Steel)
11	Spring Washer	Q235 (Steel)
12	Switch Gasket	NBR & Q235
13	Screw	Q235 (Steel)
14	O Ring	NBR

Technical Data
Working Pressure 1.5 to 8 Bar
Max Working Temperature -20°C to +60°C

Dimensions in mm

This data sheet is designed as a guide and should not be regarded as wholly accurate in every detail. We reserve the right to amend the specification of any product without notice.

ART SB

Switchbox

Features

- Powder coated aluminium switchbox to IP67
- Solid & compact design with high visibility beacon indicator
- Captive cover bolts are safely retained during installation and maintenence
- Easily adjustable with no tools required
- Dual cable entries are provided
- Mounted to the actuator using a NAMUR standard stainless steel mounting bracket
- Switchboxes available to suit hazardous areas

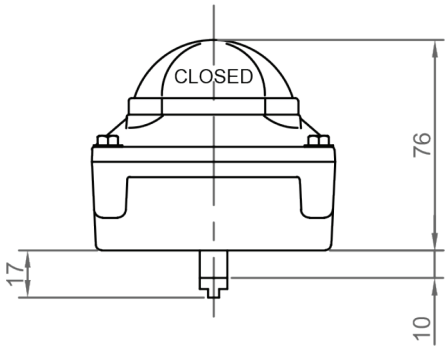

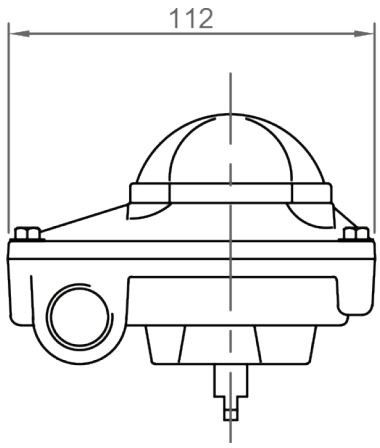

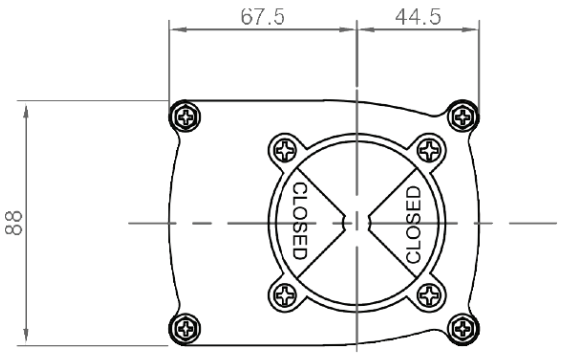

Standard Specification

Enclosure Material	:	Die cast aluminium
Enclosure Rating	:	IP67
Enclosure Finish	:	Polyester powder coating (Black)
Shaft Material	:	Stainless steel
Cable Entries	:	2 x M20 (Options PG13.5 & 1/2”NPT)
Limit Switch Type	:	2 x SPDT, mechanical
Voltage / Amps	:	250V AC/16A, 125V AC/16A, 250VDC/0.3A, 125VDC/0.6A, 30VDC/10A
Ambient Temperature	:	-20°C to +80°C

Options

Enclosure Rating	:	IP68
Proximity sensors	:	Available upon request
Beacon Indicator	:	3 way indication

Dimensions in mm

This data sheet is designed as a guide and should not be regarded as wholly accurate in every detail. We reserve the right to amend the specification of any product without notice.

Sizing Chart

Pneumatic DA Actuator to Albion Valve Combinations

	ART 160	ART 87/88	ART 993H	ART 926	ART 928	ART 987/988	ART 110/115/ 120/135/145	ART 125/140	BVI13	ART 995T/ 995NPT	ART 956/958	ART 279	ART 280
1/4"	HP50D 9-11 spacer	HP50D 9-11 spacer	HP50D 9-11 spacer			HP50D 9-11 spacer							
3/8"	HP50D 9-11 spacer	HP50D 9-11 spacer	HP50D 9-11 spacer			HP50D 9-11 spacer							
1/2"	HP50D 9-11 spacer	HP50D 9-11 spacer	HP50D 9-11 spacer	HP50D 9-11 spacer	HP50D 9-11 spacer	HP50D 9-11 spacer			HP50D SMK	HP50D 9-11 spacer	HP50D 9-11 spacer	HP63D SMK	
3/4"	HP50D 9-11 spacer	HP50D D/M	HP50D D/M	HP50D 9-11 spacer	HP50D 9-11 spacer	HP50D D/M			HP50D SMK	HP50D 9-11 spacer	HP50D 9-11 spacer	HP63D SMK	
1"	HP50D 9-11 spacer	HP50D D/M	HP50D D/M	HP50D D/M	HP50D D/M	HP63D 11-14 spacer			HP50D SMK	HP50D D/M	HP50D D/M	HP63D SMK	HP63D 11-14 spacer
1 1/4"	HP50D 9-11 spacer	HP50D D/M	HP63D D/M	HP63D 11-14 spacer	HP63D 11-14 spacer	HP63D D/M			HP50D SMK	HP63D 11-14 spacer	HP63D 11-14 spacer	HP63D SMK	HP63D D/M
1 1/2"	HP50D D/M	HP63D D/M	HP63D D/M	HP63D D/M	HP63D D/M	HP66D D/M			HP50D SMK	HP63D D/M	HP63D D/M	HP63D D/M	HP63D D/M
2"	HP50D D/M	HP66D D/M	HP66D D/M	HP66D D/M	HP66D D/M	HP75D 14-17 spacer	HP63D 11-14 spacer	HP50D 9-11 spacer	HP50D SMK	HP66D D/M	HP66D D/M	HP63D D/M	HP66D D/M
2 1/2"	HP63D D/M		HP75D D/M	HP88D D/M	HP75D D/M	HP88D D/M	HP63D 11-14 spacer	HP50D 9-11 spacer	HP63D SMK	HP88D D/M	HP88D D/M	HP75D 17-14 spacer	HP88D 14-17 spacer
3"	HP63D D/M		HP88D D/M	HP88D D/M	HP88D D/M	HP100D D/M	HP63D 11-14 spacer	HP63D 9-14 spacer	HP66D SMK	HP88D D/M	HP88D D/M	HP88D D/M	HP88D D/M
4"			HP100D D/M	HP100D D/M	HP100D D/M	HP115D 17-22 spacer	HP66D 11-14 spacer	HP66D 11-14 spacer	HP75D SMK	HP100D D/M	HP100D D/M	HP100D D/M	HP115D D/M
5"				HP125D D/M			HP75D 14-17 spacer	HP75D 14-17 spacer				HP115D D/M	HP115D D/M
6"				HP145D 22-27 spacer			HP88D 14-17 spacer	HP100D 14-17 spacer				HP145D 27-22 spacer	HP145D D/M
8"				HP160D D/M			HP115D 17-22 spacer	HP115D 17-22 spacer				HP180D 36-27 spacer	HP180D SMK
10"							HP125D D/M	HP145D 22-27 spacer					
12"							HP145D 22-27 spacer	HP160D 22-27 spacer					

D/M - Direct Mount
SMK - Special Mounting Kit

This table has been designed to help you find a suitable actuator for your valve. To do this select the Valve (top row) and Valve Size (left column) from the table above and the connecting square is the actuator that is suitable for the valve.
For full valve information please refer to the individual valve datasheet.

Dimensions in mm
This data sheet is designed as a guide and should not be regarded as wholly accurate in every detail. We reserve the right to amend the specification of any product without notice.

Sizing Chart

Pneumatic SR Actuator to Albion Valve Combinations

	ART 160	ART 87/88	ART 993H	ART 926	ART 928	ART 987/988	ART 110/115/ 120/135/145	ART 125/140	BVI13	ART 995T/ 995NPT	ART 956/958	ART 279	ART 280
1/4"	HP50S 9-11 spacer	HP50S 9-11 spacer	HP50S 9-11 spacer			HP50S 9-11 spacer							
3/8"	HP50S 9-11 spacer	HP50S 9-11 spacer	HP50S 9-11 spacer			HP50S 9-11 spacer							
1/2"	HP50S 9-11 spacer	HP50S 9-11 spacer	HP50S 9-11 spacer	HP50S 9-11 spacer	HP50S 9-11 spacer	HP50S 9-11 spacer			HP50S SMK	HP50S 9-11 spacer	HP50S 9-11 spacer	HP66S SMK	
3/4"	HP50S 9-11 spacer	HP63S 11-14 spacer	HP50S D/M	HP50S 9-11 spacer	HP50S 9-11 spacer	HP63S 11-14 spacer			HP50S SMK	HP50S 9-11 spacer	HP50S 9-11 spacer	HP66S SMK	
1"	HP50S 9-11 spacer	HP63S 11-14 spacer	HP63S D/M	HP63S 11-14 spacer	HP63S 11-14 spacer	HP66S 11-14 spacer			HP50S SMK	HP63S 11-14 spacer	HP63S 11-14 spacer	HP75S SMK	HP66S 11-14 spacer
1 1/4"	HP50S 9-11 spacer	HP63S 11-14 spacer	HP63S D/M	HP63S 11-14 spacer	HP66S 11-14 spacer	HP75S D/M			HP50S SMK	HP66S 11-14 spacer	HP66S 11-14 spacer	HP75S SMK	HP75S 14-17 spacer
1 1/2"	HP63S 11-14 spacer	HP66S D/M	HP66S D/M	HP66S D/M	HP66S D/M	HP88S 14-17 spacer			HP50S SMK	HP66S D/M	HP66S D/M	HP75S 17-14 spacer	HP75S 14-17 spacer
2"	HP63S 11-14 spacer	HP75S 14-17 spacer	HP75S 14-17 spacer	HP88S 14-17 spacer	HP88S 14-17 spacer	HP100S 14-17 spacer	HP75S 11-17 spacer	HP66S 9-14 spacer	HP63S SMK	HP75S 14-17 spacer	HP75S 14-17 spacer	HP75S 17-14 spacer	HP75S 14-17 spacer
2 1/2"	HP66S D/M		HP100S D/M	HP100S 17-22 spacer	HP100S 17-22 spacer	HP115S 17-22 spacer	HP75S 11-17 spacer	HP66S 9-14 spacer	HP75S SMK	HP100S 17-22 spacer	HP100S 17-22 spacer	HP88S 17-14 spacer	HP100S 14-17 spacer
3"	HP66S D/M		HP115S 17-22 spacer	HP115S 17-22 spacer	HP115S 17-22 spacer	HP125S 17-22 spacer	HP88S 11-17 spacer	HP75S 9-17 spacer	HP75S SMK	HP115S 17-22 spacer	HP115S 17-22 spacer	HP115S 22-17 spacer	HP115S 17-22 spacer
4"			HP125S 17-22 spacer	HP125S 17-22 spacer	HP125S 17-22 spacer	HP145S 17-27 spacer	HP88S 11-17 spacer	HP88S 11-17 spacer	HP88S SMK	HP125S 17-22 spacer	HP125S 17-22 spacer	HP125S 22-17 spacer	HP125S D/M
5"				HP145S 22-27 spacer			HP100S 14-17 spacer	HP115S 14-22 spacer				HP145S 27-22 spacer	HP145S 22-27 spacer
6"				HP180S 22-36 spacer			HP115S 14-22 spacer	HP125S 14-22 spacer				HP160S 27-22 spacer	HP180S 27-36 spacer
8"				HP200S 27-36 spacer			HP145S 17-27 spacer	HP145S 17-27 spacer				HP211S SMK	HP211S SMK
10"							HP180S 22-36 spacer	HP180S 22-36 spacer					
12"							HP200S SMK	HP200S SMK					

D/M - Direct Mount
SMK - Special Mounting Kit

This table has been designed to help you find a suitable actuator for your valve. To do this select the Valve (top row) and Valve Size (left column) from the table above and the connecting square is the actuator that is suitable for the valve.
For full valve information please refer to the individual valve datasheet.

Dimensions in mm

This data sheet is designed as a guide and should not be regarded as wholly accurate in every detail. We reserve the right to amend the specification of any product without notice.

Sizing Chart

Electric Actuator to Albion Valve Combinations

	ART 160	ART 87/88	ART 993H	ART 926	ART 928	ART 987/988	ART 110/115/120/ 135/145	ART 125/140	BVI13	ART 995T/ 995NPT	ART 956/958	ART 279	ART 280
1/4"	HQ3 9-11 spacer	HQ3 9-11 spacer	HQ5 9-14 spacer			HQ5 9-14 spacer							
3/8"	HQ3 9-11 spacer	HQ3 9-11 spacer	HQ5 9-14 spacer			HQ5 9-14 spacer							
1/2"	HQ3 9-11 spacer	HQ3 9-11 spacer	HQ5 9-14 spacer	HQ5 9-14 spacer	HQ5 9-14 spacer	HQ5 9-14 spacer			HQ5 SMK	HQ5 9-14 spacer	HQ5 9-14 spacer	HQ5 14-9 spacer	
3/4"	HQ3 9-11 spacer	HQ3 D/M	HQ5 11-14 spacer	HQ5 9-14 spacer	HQ5 9-14 spacer	HQ5 11-14 spacer			HQ5 SMK	HQ5 9-14 spacer	HQ5 9-14 spacer	HQ5 14-9 spacer	
1"	HQ3 9-11 spacer	HQ3 D/M	HQ5 11-14 spacer	HQ5 11-14 spacer	HQ5 11-14 spacer	HQ5 11-14 spacer			HQ5 SMK	HQ5 11-14 spacer	HQ5 11-14 spacer	HQ5 14-11 spacer	HQ3 9-11 spacer
1 1/4"	HQ3 9-11 spacer	HQ3 D/M	HQ5 D/M	HQ5 11-14 spacer	HQ5 11-14 spacer	HQ5 D/M			HQ5 SMK	HQ5 11-14 spacer	HQ5 11-14 spacer	HQ5 14-11 spacer	HQ5 D/M
1 1/2"	HQ3 D/M	HQ5 D/M	HQ5 D/M	HQ5 D/M	HQ5 D/M	HQ5 D/M			HQ5 SMK	HQ5 D/M	HQ5 D/M	HQ5 D/M	HQ5 D/M
2"	HQ3 D/M	HQ5 D/M	HQ5 D/M	HQ5 D/M	HQ5 D/M	HQ6 D/M	HQ5 11-14 spacer	HQ5 9-14 spacer	HQ5 SMK	HQ5 D/M	HQ5 D/M	HQ5 D/M	HQ5 D/M
2 1/2"	HQ5 D/M		HQ8 D/B	HQ8 D/B	HQ8 D/B	HQ8 D/B	HQ5 11-14 spacer	HQ5 9-14 spacer	HQ5 SMK	HQ8 D/B	HQ8 D/B	HQ6 D/M	HQ8 D/M
3"	HQ5 D/M		HQ15 D/M	HQ15 D/M	HQ15 D/M	HQ15 D/M	HQ5 11-14 spacer	HQ5 9-14 spacer	HQ5 SMK	HQ15 D/M	HQ15 D/M	HQ15 D/M	HQ15 D/M
4"			HQ15 D/M	HQ15 D/M	HQ15 D/M	HQ20 D/M	HQ5 11-14 spacer	HQ5 11-14 spacer	HQ6 SMK	HQ15 D/M	HQ15 D/M	HQ15 D/M	HQ30 D/M
5"				HQ30 D/M			HQ6 D/M	HQ8 D/M				HQ30 D/M	HQ30 D/M
6"				HQ50 D/M			HQ15 14-17 spacer	HQ15 14-17 spacer				HQ50 D/M	HQ50 D/B
8"				HQ60 D/M			HQ20 D/M	HQ20 D/M				HQ80 D/M	HQ80 D/M
10"							HQ30 D/M	HQ50 D/M					
12"							HQ50 D/M	HQ50 D/M					

D/M - Direct Mount
SMK - Special Mounting Kit
D/B - Machined Drive Bush Required
* HQ3 not available in 24v ac. Alternative options are available should 24v ac be required, please contact the sales office.

This table has been designed to help you find a suitable actuator for your valve. To do this select the Valve (top row) and Valve Size (left column) from the table above and the connecting square is the actuator that is suitable for the valve.
For full valve information please refer to the individual valve datasheet.

Dimensions in mm
This data sheet is designed as a guide and should not be regarded as wholly accurate in every detail. We reserve the right to amend the specification of any product without notice.

URS is a member of Registrar of Standards (Holdings) Ltd.

URS is a member of Registrar of Standards (Holdings) Ltd.

Distributor